PMI – Lever Operated Hand Pump

Article no.	Max Pressure BAR	Price £	Price €
PMI6	450	**£172.90**	**€181.50**
PMI12	250	**£175.60**	**€184.40**
PMI25	130	**£175.60**	**€184.40**
PMI45	80	**£181.20**	**€190.20**
Rubber Protection		**£6.90**	**€7.30**
Relief Valve Option		**£13.80**	**€14.50**

Price is without tank – order tanks separately

Effort (daN) operating on the end of the lever
Average man will generate 25 daN force

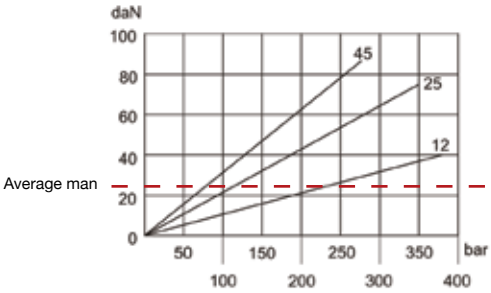

Ordering Code

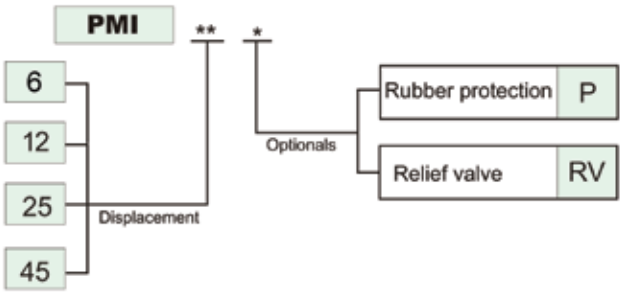

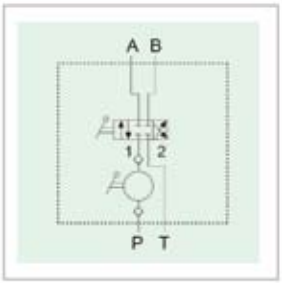

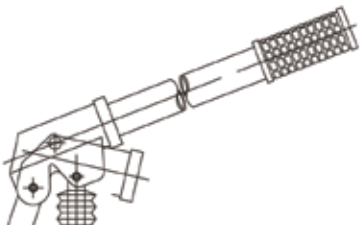

Lever = 600mm

With 4 way, 3 position (closed centre) flow divertor.

Oil flow in both directions of lever action.

Dimensions

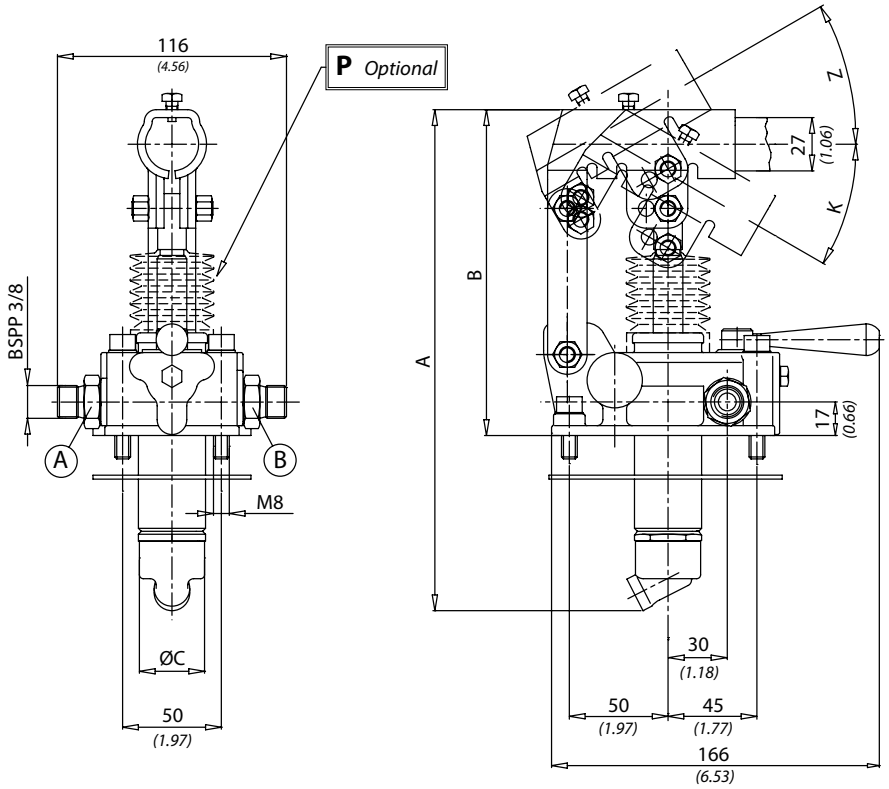

Y	Displacement	K	Z	A	B	C	Weight Kg
6	6 cm³ (0.36 in³)	31°	26°	253 (9.96)	166 (6.53)	34 (1.33)	4,4
12	12 cm³ (0.73 in³)	31°	35°				
25	25 cm³ (1.52 in³)	30°	25°	273 (10.74)	172 (6.77)		
45	45 cm³ (2.75 in³)	33°	35°	283 (11.14)		40 (1.57)	